TOOL PACK CONNECTOR

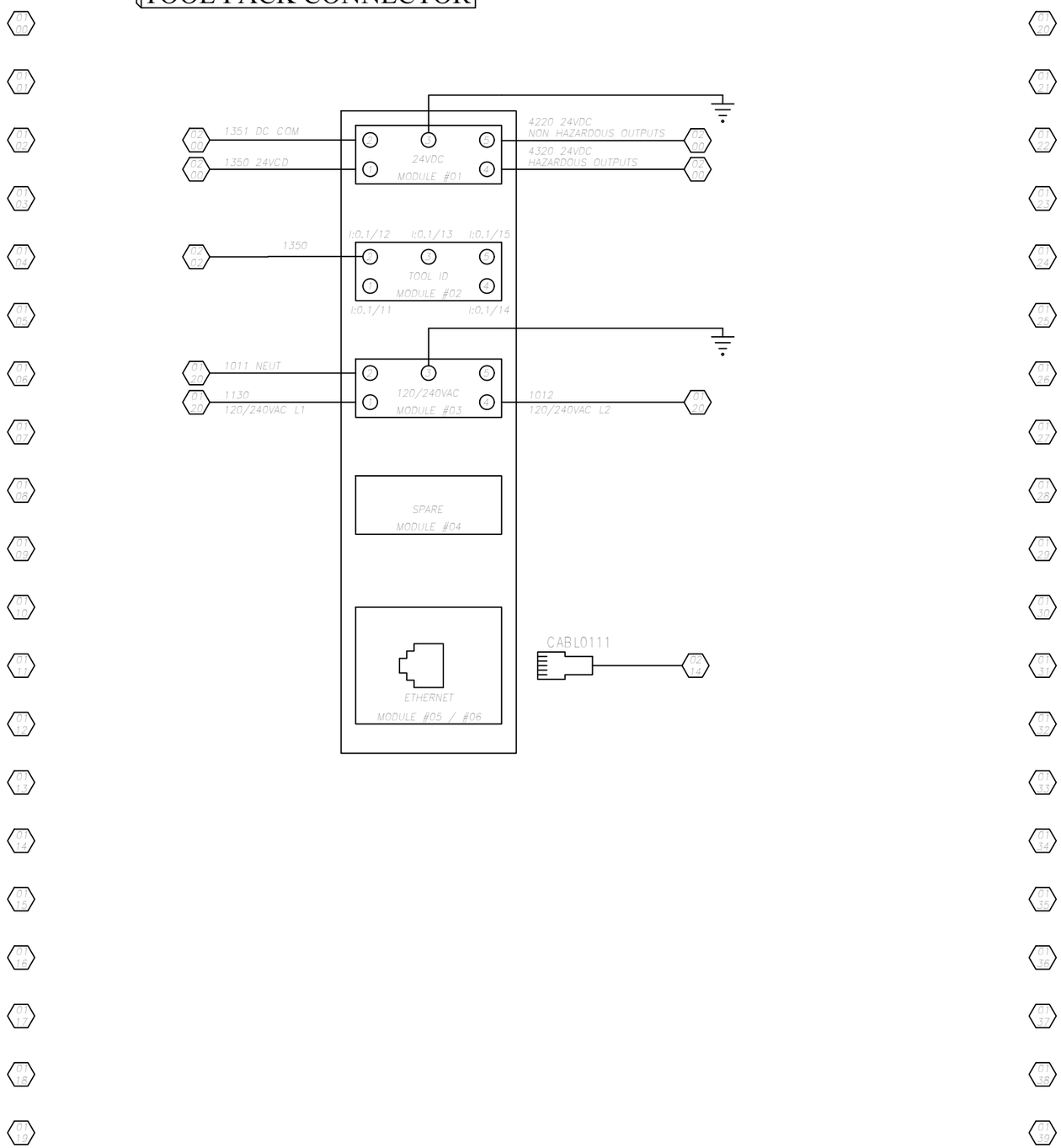

120 VAC/240VAC

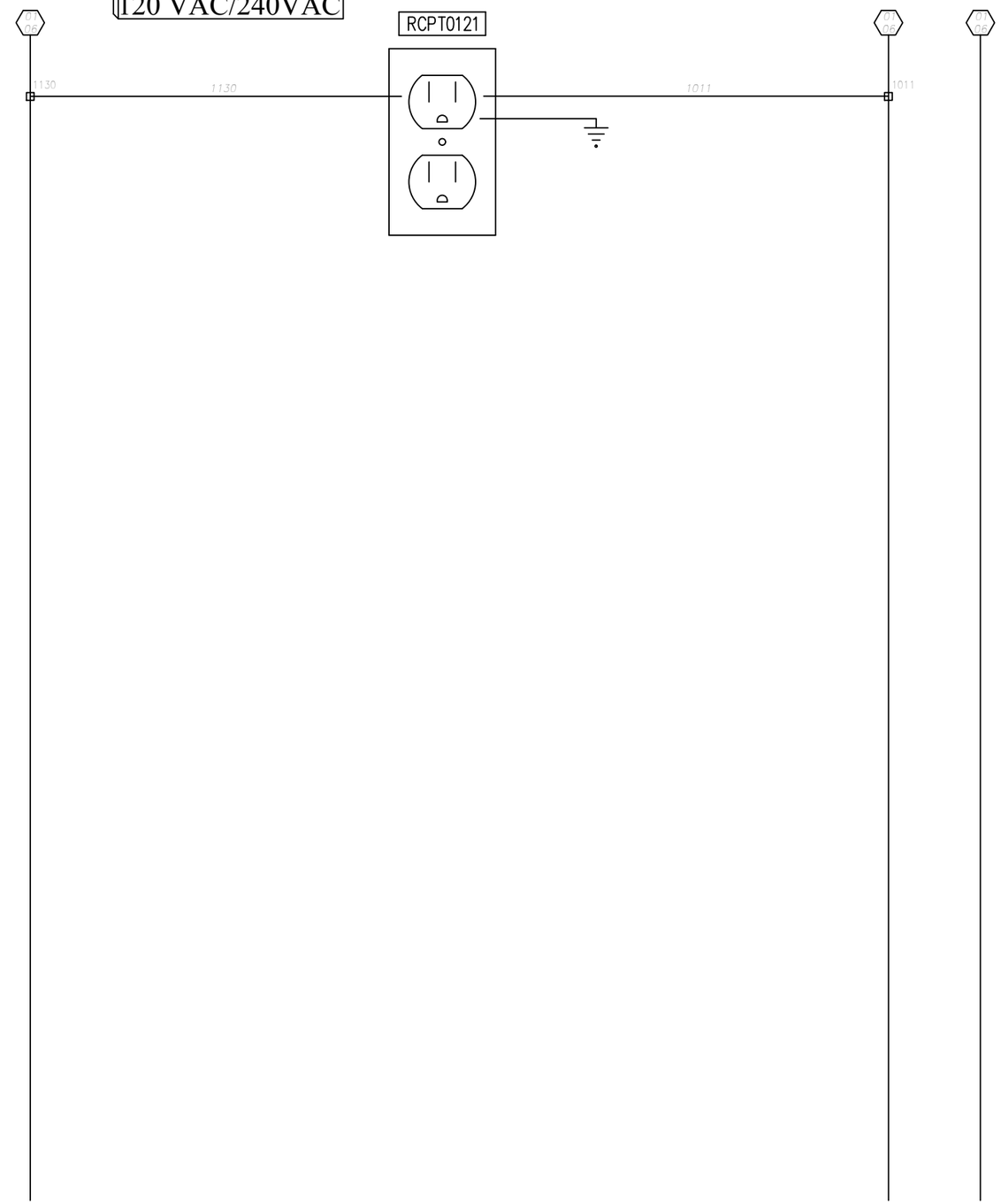

APPROVALS	SUPPLY VOLTAGE	NEMA TYPE
N/A	480V 3PH 60HZ	12

AREA CLASSIFICATION
GENERAL INDUSTRIAL

REV	DESCRIPTION	DATE	BY

TERMINAL BLOCK LEGEND
- MAIN PNL TERMINALS
- N/A
- OPR STA TERMINALS
- J-BOX TERMINALS
- FUSED TERMINALS

THIS DOCUMENT CONTAINS PROPRIETARY INFORMATION WHICH IS THE PROPERTY OF FEYEN ZYLSTRA, INC. THIS INFORMATION HAS BEEN DETERMINED TO BE CONFIDENTIAL BY FEYEN ZYLSTRA, INC., AND SHALL NOT BE USED, DISCLOSED OR REPRODUCED, IN WHOLE OR IN PART FOR THE MANUFACTURE OR SALE OF ANY PART OR PRODUCT BY YOU OR ANY OTHER PARTY TO WHOM THE INFORMATION MAY BE SUPPLIED WITHOUT THE PRIOR WRITTEN CONSENT OF FEYEN ZYLSTRA, INC.

FEYEN ZYLSTRA
2396 HILLSIDE DR NW
GRAND RAPIDS, MI
49544

POWER DISTRIBUTION

CG AUTOMATION & FIXTURE, INC
TOOLING FIXTURES
TOOL PACK 1889

ENGINEER	SCALE	CSO #	DRAWING #	REV
PH	N/A	4/18/2016	1889-E01	
DRAWN BY	CHECKED BY	DATE 6/16/2016	SHEET 1 OF 11	
NJN				

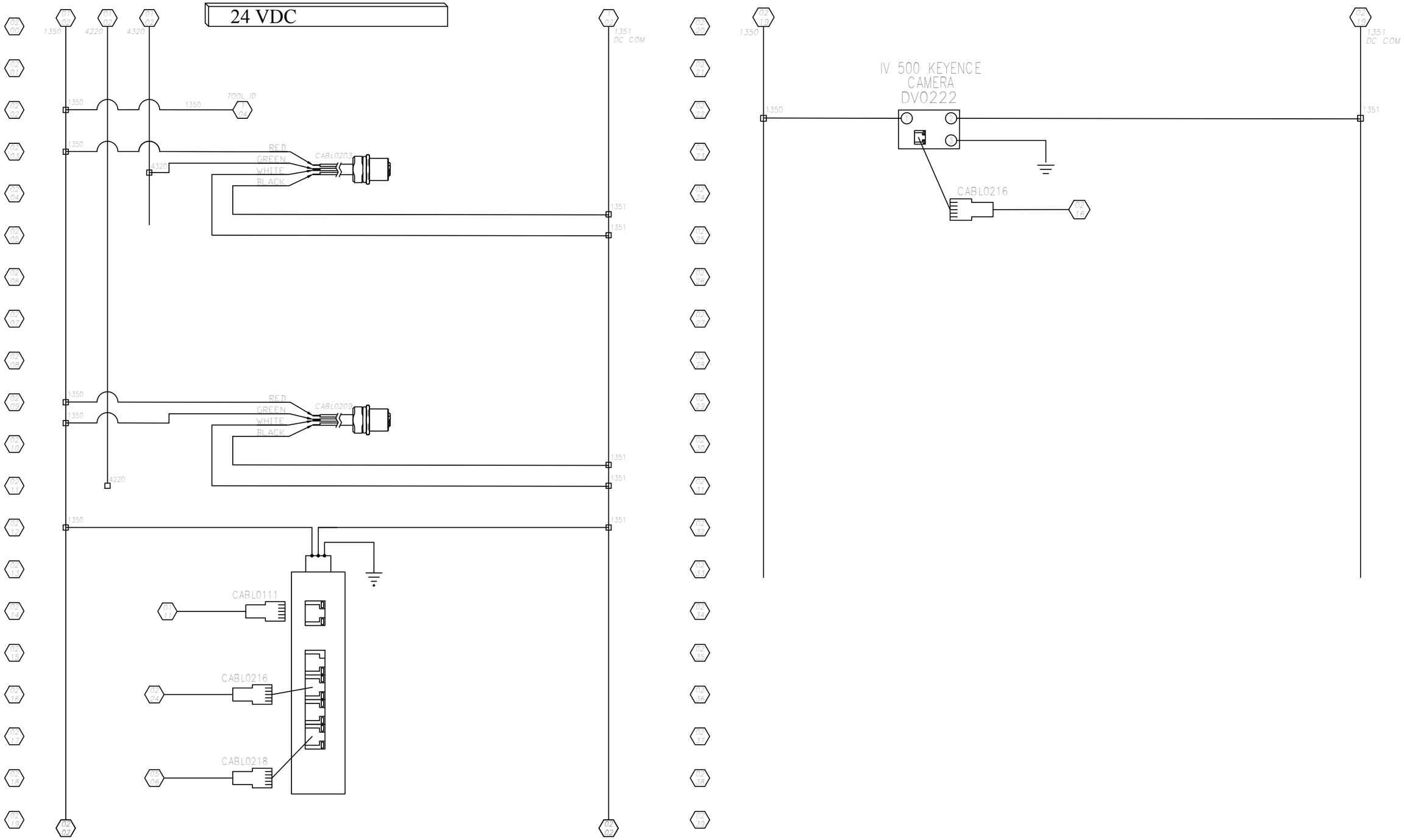

APPROVALS	SUPPLY VOLTAGE	NEMA TYPE
N/A	480V 3PH 60HZ	12

AREA CLASSIFICATION
GENERAL INDUSTRIAL

REV	DESCRIPTION	DATE	BY

MAIN PNL TERMINALS
N/A
OPR STA TERMINALS
J-BOX TERMINALS
FUSED TERMINALS

TERMINAL BLOCK LEGEND

THIS DOCUMENT CONTAINS PROPRIETARY INFORMATION WHICH IS THE PROPERTY OF FEYEN ZYLSTRA, INC. THIS INFORMATION HAS BEEN DETERMINED TO BE CONFIDENTIAL BY FEYEN ZYLSTRA, INC., AND SHALL NOT BE USED, DISCLOSED OR REPRODUCED, IN WHOLE OR IN PART FOR THE MANUFACTURE OR SALE OF ANY PART OR PRODUCT BY YOU OR ANY OTHER PARTY TO WHOM THE INFORMATION MAY BE SUPPLIED WITHOUT THE PRIOR WRITTEN CONSENT OF FEYEN ZYLSTRA, INC.

FEYEN ZYLSTRA
2396 HILLSIDE DR NW
GRAND RAPIDS, MI
49544

POWER DISTRIBUTION

CG AUTOMATION & FIXTURE, INC
TOOLING FIXTURES
TOOL PACK 1889

ENGINEER	SCALE	CSO #	DRAWING #	REV
PH	N/A	4/18/2016	1889-E02	
DRAWN BY	CHECKED BY	DATE 6/16/2016	SHEET 2 OF 11	
NJN				

SPARE SHEET

APPROVALS	SUPPLY VOLTAGE	NEMA TYPE
N/A	480V 3PH 60HZ	12

AREA CLASSIFICATION
GENERAL INDUSTRIAL

REV	DESCRIPTION	DATE	BY

MAIN PNL TERMINALS
N/A
OPR STA TERMINALS
J-BOX TERMINALS
FUSED TERMINALS

TERMINAL BLOCK LEGEND

THIS DOCUMENT CONTAINS PROPRIETARY INFORMATION WHICH IS THE PROPERTY OF FEYEN ZYLSTRA, INC. THIS INFORMATION HAS BEEN DETERMINED TO BE CONFIDENTIAL BY FEYEN ZYLSTRA, INC., AND SHALL NOT BE USED, DISCLOSED OR REPRODUCED, IN WHOLE OR IN PART FOR THE MANUFACTURE OR SALE OF ANY PART OR PRODUCT BY YOU OR ANY OTHER PARTY TO WHOM THE INFORMATION MAY BE SUPPLIED WITHOUT THE PRIOR WRITTEN CONSENT OF FEYEN ZYLSTRA, INC.

FEYEN ZYLSTRA
2396 HILLSIDE DR NW
GRAND RAPIDS, MI
49544

ENGINEER	SCALE
PH	N/A
DRAWN BY	CHECKED BY
NJN	

POWER DISTRIBUTION

CG AUTOMATION & FIXTURE, INC
TOOLING FIXTURES
TOOL PACK 1889

CSO #	DRAWING #	REV
4/18/2016	1889-E03	

DATE 6/16/2016 | SHEET 3 OF 11

SPARE SHEET

APPROVALS	SUPPLY VOLTAGE	NEMA TYPE
N/A	480V 3PH 60HZ	12

AREA CLASSIFICATION
GENERAL INDUSTRIAL

REV	DESCRIPTION	DATE	BY

MAIN PNL TERMINALS
N/A
OPR STA TERMINALS
J-BOX TERMINALS
FUSED TERMINALS

TERMINAL BLOCK LEGEND

THIS DOCUMENT CONTAINS PROPRIETARY INFORMATION WHICH IS THE PROPERTY OF FEYEN ZYLSTRA, INC. THIS INFORMATION HAS BEEN DETERMINED TO BE CONFIDENTIAL BY FEYEN ZYLSTRA, INC., AND SHALL NOT BE USED, DISCLOSED OR REPRODUCED, IN WHOLE OR IN PART FOR THE MANUFACTURE OR SALE OF ANY PART OR PRODUCT BY YOU OR ANY OTHER PARTY TO WHOM THE INFORMATION MAY BE SUPPLIED WITHOUT THE PRIOR WRITTEN CONSENT OF FEYEN ZYLSTRA, INC.

FEYEN ZYLSTRA
2296 HILLSIDE DR NW
GRAND RAPIDS, MI
49544

ENGINEER	SCALE
PH	N/A
DRAWN BY	CHECKED BY
NJN	

POWER DISTRIBUTION

CG AUTOMATION & FIXTURE, INC
TOOLING FIXTURES
TOOL PACK 1889

CSO #	DRAWING #	REV
4/18/2016	1889-E04	

DATE 6/16/2016 | SHEET 4 OF 11

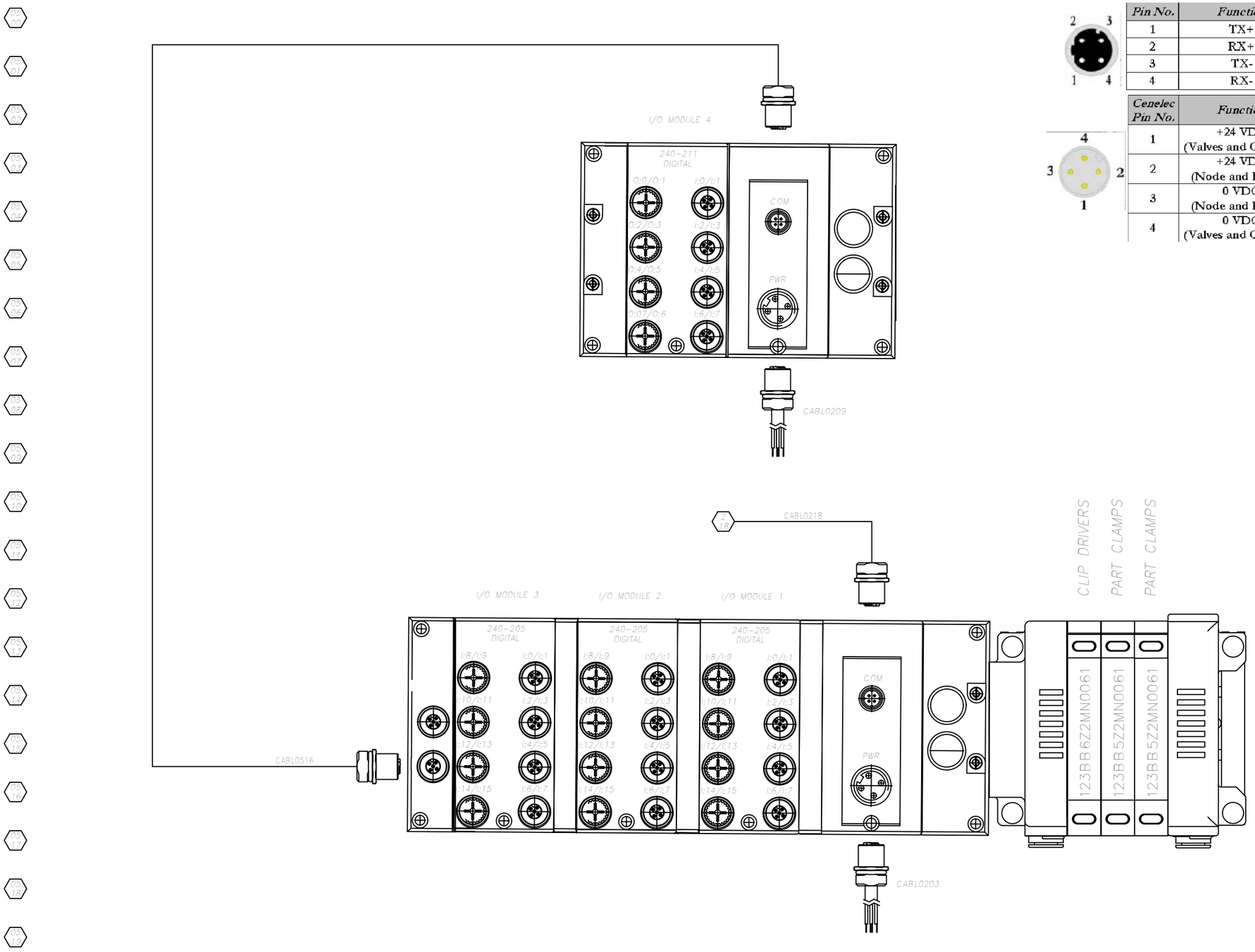

Pin No.	Function	Description
1	TX+	Positive Transmit Line
2	RX+	Positive Receive Line
3	TX-	Negative Transmit Line
4	RX-	Negative Receive Line

Cenelec Pin No.	Function	Description
1	+24 VDC (Valves and Outputs)	Voltage used to power outputs (valve coils and discrete outputs) SW
2	+24 VDC (Node and Inputs)	Voltage used to power discrete inputs and node electronics UNSW
3	0 VDC (Node and Inputs)	0 VDC Voltage used to power discrete inputs and node electronics UNSW
4	0 VDC (Valves and Outputs)	0 VDC Voltage used to power outputs (valve coils and discrete outputs) SW

APPROVALS	SUPPLY VOLTAGE	NEMA TYPE
N/A	480V 3PH 60HZ	12

AREA CLASSIFICATION
GENERAL INDUSTRIAL

REV	DESCRIPTION	DATE	BY

MAIN PNL TERMINALS
N/A
OPR STA TERMINALS
J-BOX TERMINALS
FUSED TERMINALS
TERMINAL BLOCK LEGEND

THIS DOCUMENT CONTAINS PROPRIETARY INFORMATION WHICH IS THE PROPERTY OF FEYEN ZYLSTRA, INC. THIS INFORMATION HAS BEEN DETERMINED TO BE CONFIDENTIAL BY FEYEN ZYLSTRA, INC., AND SHALL NOT BE USED, DISCLOSED OR REPRODUCED, IN WHOLE OR IN PART FOR THE MANUFACTURE OR SALE OF ANY PART OR PRODUCT BY YOU OR ANY OTHER PARTY TO WHOM THE INFORMATION MAY BE SUPPLIED WITHOUT THE PRIOR WRITTEN CONSENT OF FEYEN ZYLSTRA, INC.

FEYEN ZYLSTRA
2396 HILLSIDE DR NW
GRAND RAPIDS, MI
49544

I/O SCHEMATIC

CG AUTOMATION & FIXTURE, INC
TOOLING FIXTURES
TOOL PACK 1889

ENGINEER	SCALE	CSO #	DRAWING #	REV
PH	N/A	4/18/2016	1889-E05	
DRAWN BY	CHECKED BY	DATE 6/16/2016	SHEET 5 OF 11	
NJN				

PRX = PROXIMITY SENSOR
LZS = LASER SENSOR
LS = LIMIT SWITCH
OPB = OPTICAL PUSH BUTTON
OPS = OPTICAL PRESENCE SENSOR
ESPB = E-STOP PUSH BUTTON
PB = PUSH BUTTON
SV = SOLENOID VALVE
PRS = PRESSURE SWITCH
LVDT = LINEAR TRANSDUCER
CR = CONTROL RELAY
CLS = COLOR SENSOR

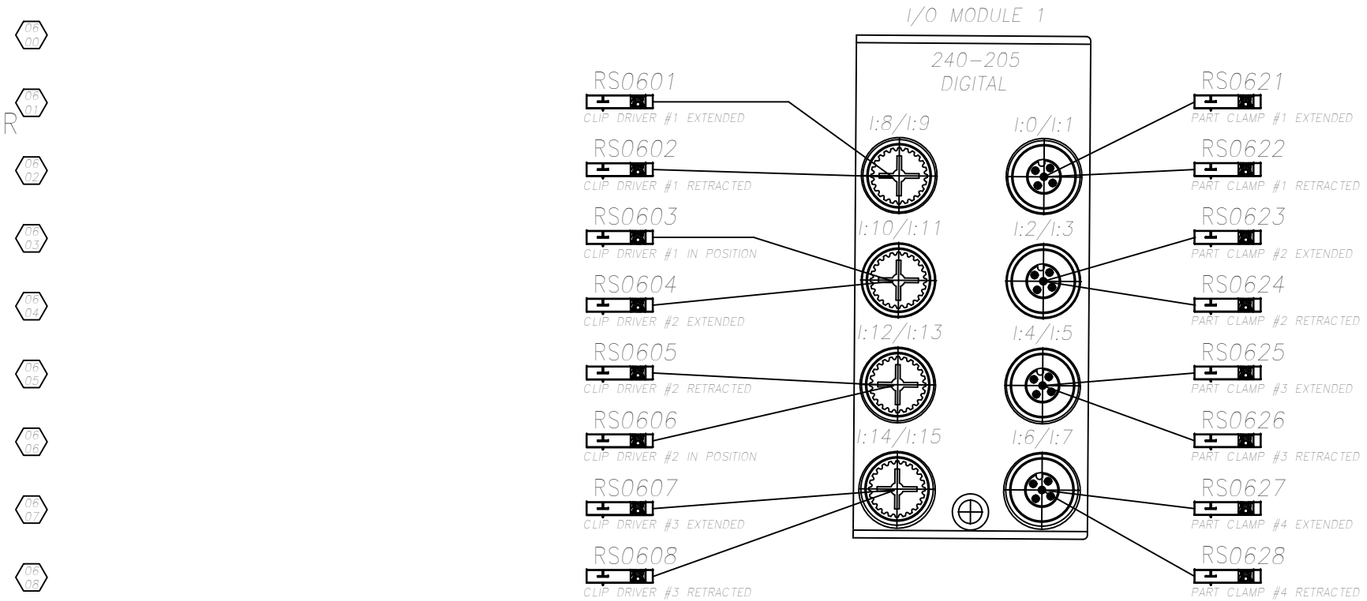

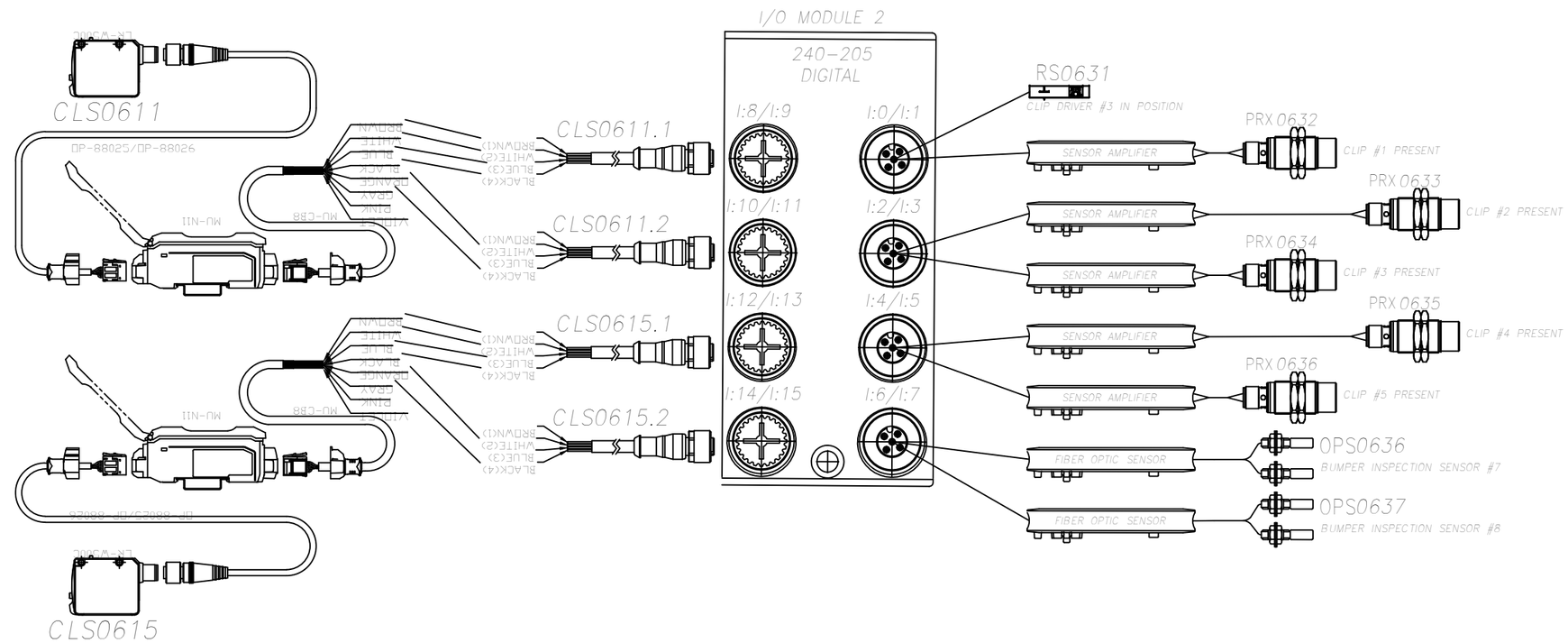

APPROVALS	SUPPLY VOLTAGE	NEMA TYPE
N/A	480V 3PH 60HZ	12

AREA CLASSIFICATION
GENERAL INDUSTRIAL

REV	DESCRIPTION	DATE	BY

MAIN PNL TERMINALS
N/A
OPR STA TERMINALS
J-BOX TERMINALS
FUSED TERMINALS
TERMINAL BLOCK LEGEND

THIS DOCUMENT CONTAINS PROPRIETARY INFORMATION WHICH IS THE PROPERTY OF FEYEN ZYLSTRA, INC. THIS INFORMATION HAS BEEN DETERMINED TO BE CONFIDENTIAL BY FEYEN ZYLSTRA, INC., AND SHALL NOT BE USED, DISCLOSED OR REPRODUCED, IN WHOLE OR IN PART FOR THE MANUFACTURE OR SALE OF ANY PART OR PRODUCT BY YOU OR ANY OTHER PARTY TO WHOM THE INFORMATION MAY BE SUPPLIED WITHOUT THE PRIOR WRITTEN CONSENT OF FEYEN ZYLSTRA, INC.

FEYEN ZYLSTRA
2396 HILLSIDE DR NW
GRAND RAPIDS, MI
49544

ENGINEER	SCALE
PH	N/A
DRAWN BY	CHECKED BY
NJN	

I/O SCHEMATIC

CG AUTOMATION & FIXTURE, INC
TOOLING FIXTURES
TOOL PACK 1889

CSO #	DRAWING #	REV
4/18/2016	1889-E06	

DATE 6/16/2016 SHEET 6 OF 11

PRX = PROXIMITY SENSOR
LZS = LASER SENSOR
LS = LIMIT SWITCH
OPB = OPTICAL PUSH BUTTON
OPS = OPTICAL PRESENCE SENSOR
ESPB = E-STOP PUSH BUTTON
PB = PUSH BUTTON
SV = SOLENOID VALVE
PRS = PRESSURE SWITCH
LVDT = LINEAR TRANSDUCER
CR = CONTROL RELAY
CS = COLOR SENSOR
CLS = COLOR SENSOR

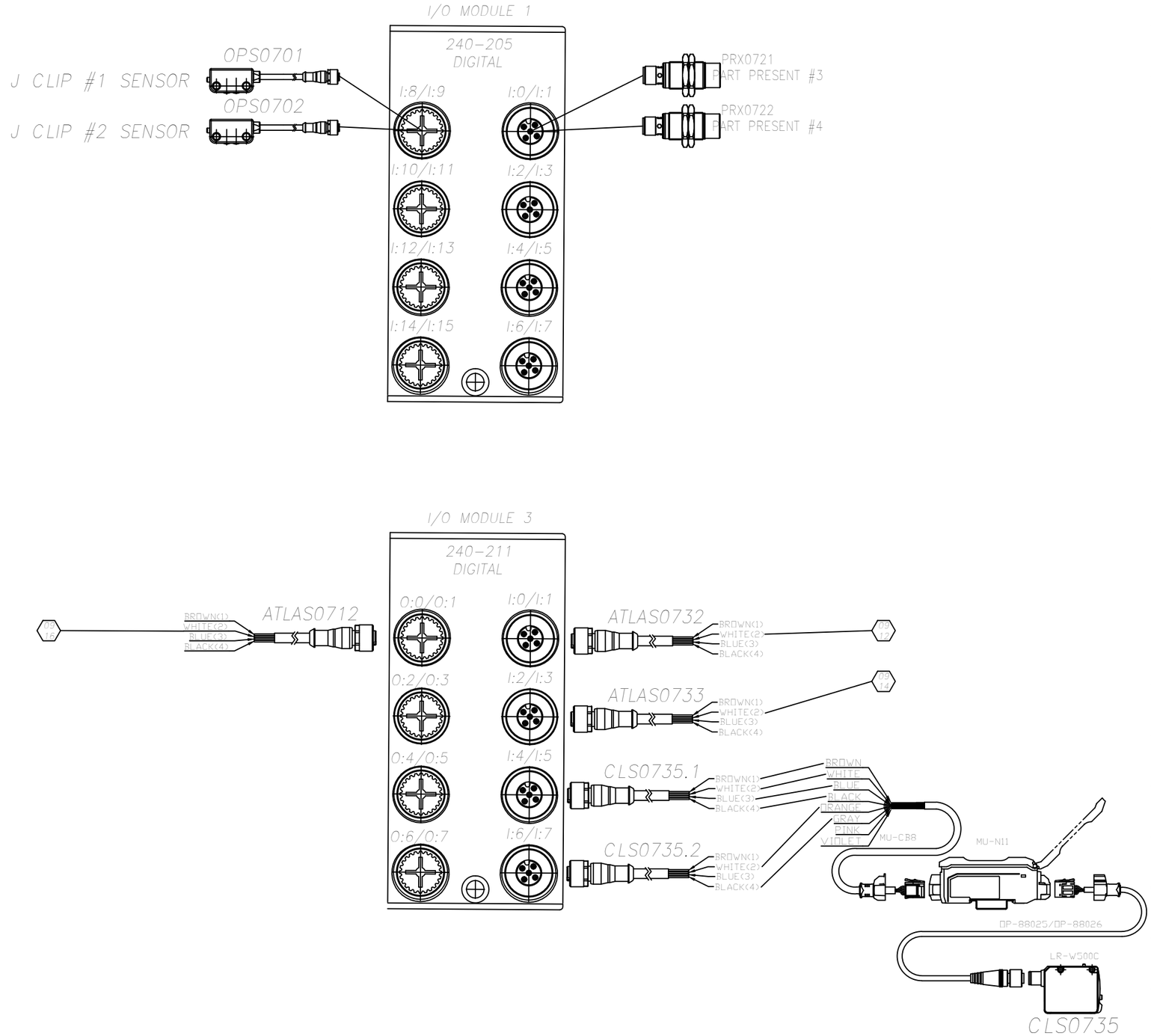

APPROVALS	SUPPLY VOLTAGE	NEMA TYPE
N/A	480V 3PH 60HZ	12

AREA CLASSIFICATION
GENERAL INDUSTRIAL

REV	DESCRIPTION	DATE	BY

MAIN PNL TERMINALS
N/A
OPR STA TERMINALS
J-BOX TERMINALS
FUSED TERMINALS
TERMINAL BLOCK LEGEND

THIS DOCUMENT CONTAINS PROPRIETARY INFORMATION WHICH IS THE PROPERTY OF FEYEN ZYLSTRA, INC. THIS INFORMATION HAS BEEN DETERMINED TO BE CONFIDENTIAL BY FEYEN ZYLSTRA, INC., AND SHALL NOT BE USED, DISCLOSED OR REPRODUCED, IN WHOLE OR IN PART FOR THE MANUFACTURE OR SALE OF ANY PART OR PRODUCT BY YOU OR ANY OTHER PARTY TO WHOM THE INFORMATION MAY BE SUPPLIED WITHOUT THE PRIOR WRITTEN CONSENT OF FEYEN ZYLSTRA, INC.

FEYEN ZYLSTRA
2396 HILLSIDE DR NW
GRAND RAPIDS, MI
49544

ENGINEER	SCALE
PH	N/A
DRAWN BY	CHECKED BY
NJN	

I/O SCHEMATIC

CG AUTOMATION & FIXTURE, INC
TOOLING FIXTURES
TOOL PACK 1889

CSO #	DRAWING #	REV
4/18/2016	1889-E07	

DATE 6/16/2016 SHEET 7 OF 11

PRX = PROXIMITY SENSOR
LZS = LASER SENSOR
LS = LIMIT SWITCH
OPB = OPTICAL PUSH BUTTON
OPS = OPTICAL PRESENCE SENSOR
ESPB = E-STOP PUSH BUTTON
PB = PUSH BUTTON
SV = SOLENOID VALVE
PRS = PRESSURE SWITCH
LVDT = LINEAR TRANSDUCER
CR = CONTROL RELAY
CLS = COLOR SENSOR

APPROVALS	SUPPLY VOLTAGE	NEMA TYPE
N/A	480V 3PH 60HZ	12

AREA CLASSIFICATION
GENERAL INDUSTRIAL

REV	DESCRIPTION	DATE	BY

MAIN PNL TERMINALS
N/A
OPR STA TERMINALS
J-BOX TERMINALS
FUSED TERMINALS

TERMINAL BLOCK LEGEND

THIS DOCUMENT CONTAINS PROPRIETARY INFORMATION WHICH IS THE PROPERTY OF FEYEN ZYLSTRA, INC. THIS INFORMATION HAS BEEN DETERMINED TO BE CONFIDENTIAL BY FEYEN ZYLSTRA, INC., AND SHALL NOT BE USED, DISCLOSED OR REPRODUCED, IN WHOLE OR IN PART FOR THE MANUFACTURE OR SALE OF ANY PART OR PRODUCT BY YOU OR ANY OTHER PARTY TO WHOM THE INFORMATION MAY BE SUPPLIED WITHOUT THE PRIOR WRITTEN CONSENT OF FEYEN ZYLSTRA, INC.

FEYEN ZYLSTRA
2396 HILLSIDE DR NW
GRAND RAPIDS, MI
49544

ENGINEER	SCALE
PH	N/A
DRAWN BY	CHECKED BY
NJN	

I/O SCHEMATIC

CG AUTOMATION & FIXTURE, INC
TOOLING FIXTURES
TOOL PACK 1889

CSO #	DRAWING #	REV
4/18/2016	1889-E08	

DATE 6/16/2016 SHEET 8 OF 11

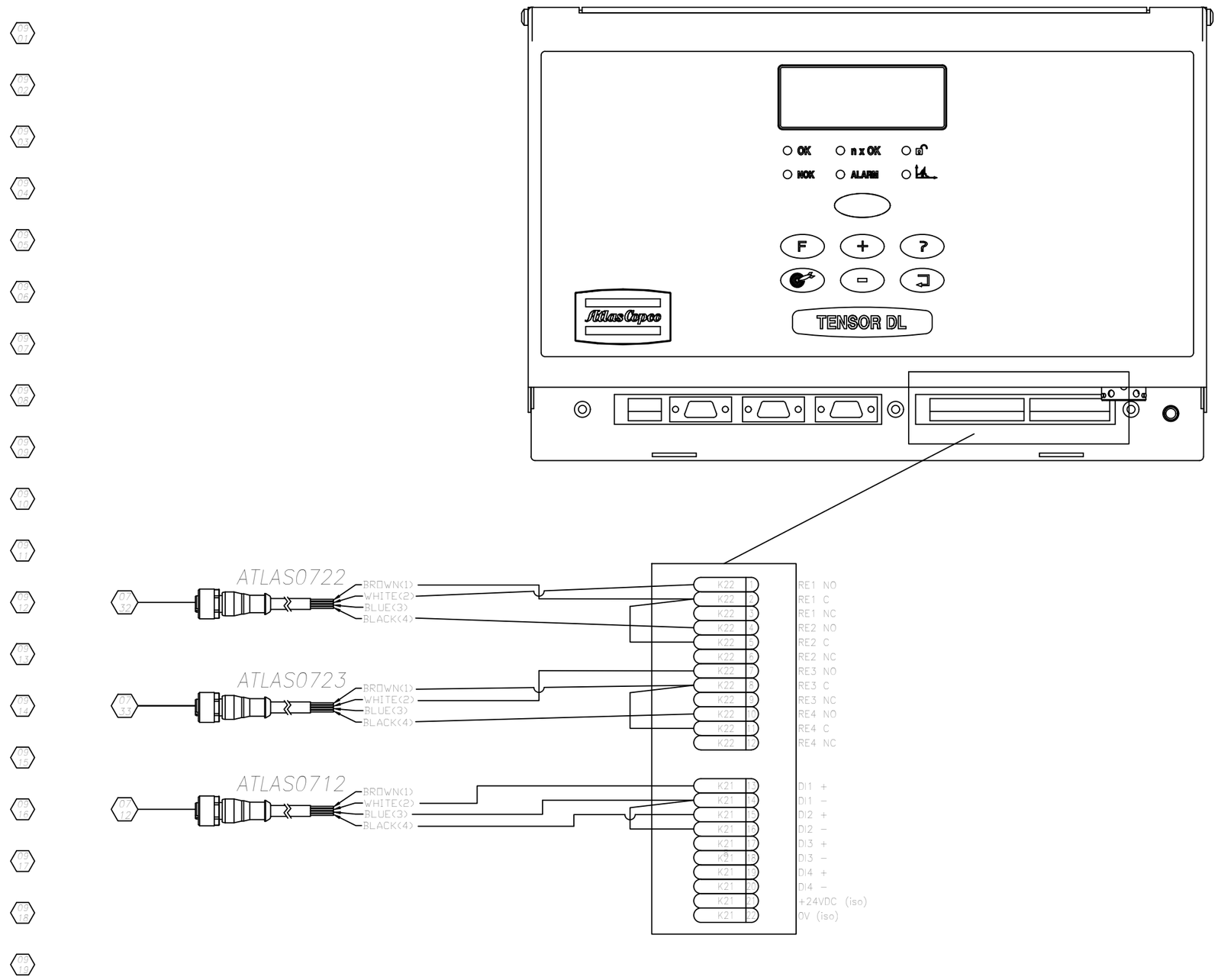

APPROVALS	SUPPLY VOLTAGE	NEMA TYPE
N/A	480V 3PH 60HZ	12

AREA CLASSIFICATION
GENERAL INDUSTRIAL

REV	DESCRIPTION	DATE	BY

MAIN PNL TERMINALS
N/A
OPR STA TERMINALS
J-BOX TERMINALS
FUSED TERMINALS

TERMINAL BLOCK LEGEND

THIS DOCUMENT CONTAINS PROPRIETARY INFORMATION WHICH IS THE PROPERTY OF FEYEN ZYLSTRA, INC. THIS INFORMATION HAS BEEN DETERMINED TO BE CONFIDENTIAL BY FEYEN ZYLSTRA, INC., AND SHALL NOT BE USED, DISCLOSED OR REPRODUCED, IN WHOLE OR IN PART FOR THE MANUFACTURE OR SALE OF ANY PART OR PRODUCT BY YOU OR ANY OTHER PARTY TO WHOM THE INFORMATION MAY BE SUPPLIED WITHOUT THE PRIOR WRITTEN CONSENT OF FEYEN ZYLSTRA, INC.

FEYEN ZYLSTRA
2396 HILLSIDE DR NW
GRAND RAPIDS, MI
49544

ENGINEER	SCALE
PH	N/A
DRAWN BY	CHECKED BY
NJN	

I/O SCHEMATIC

CG AUTOMATION & FIXTURE, INC
TOOLING FIXTURES
TOOL PACK 1889

CSO #	DRAWING #	REV
4/18/2016	1889-E09	

DATE 6/16/2016 SHEET 9 OF 11

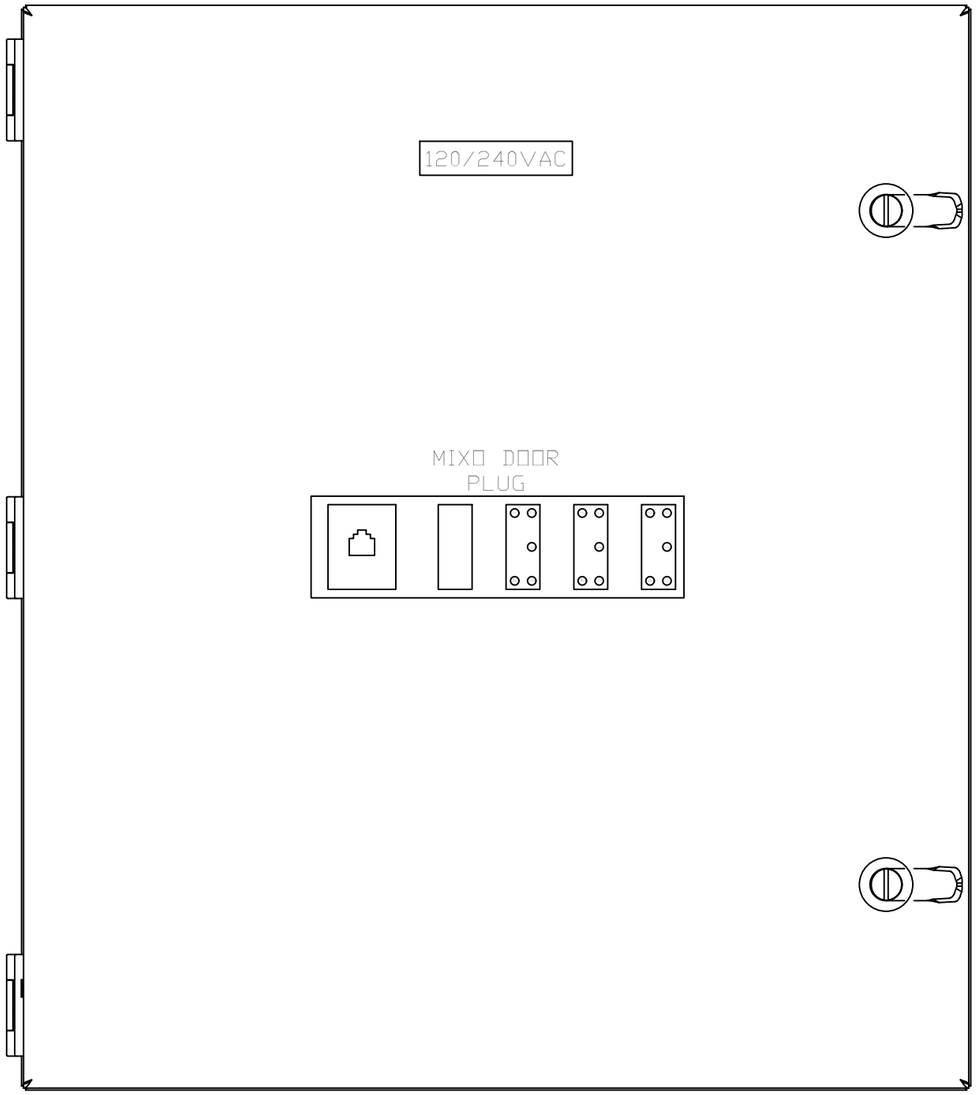

DOOR
STICKER
LOCATION

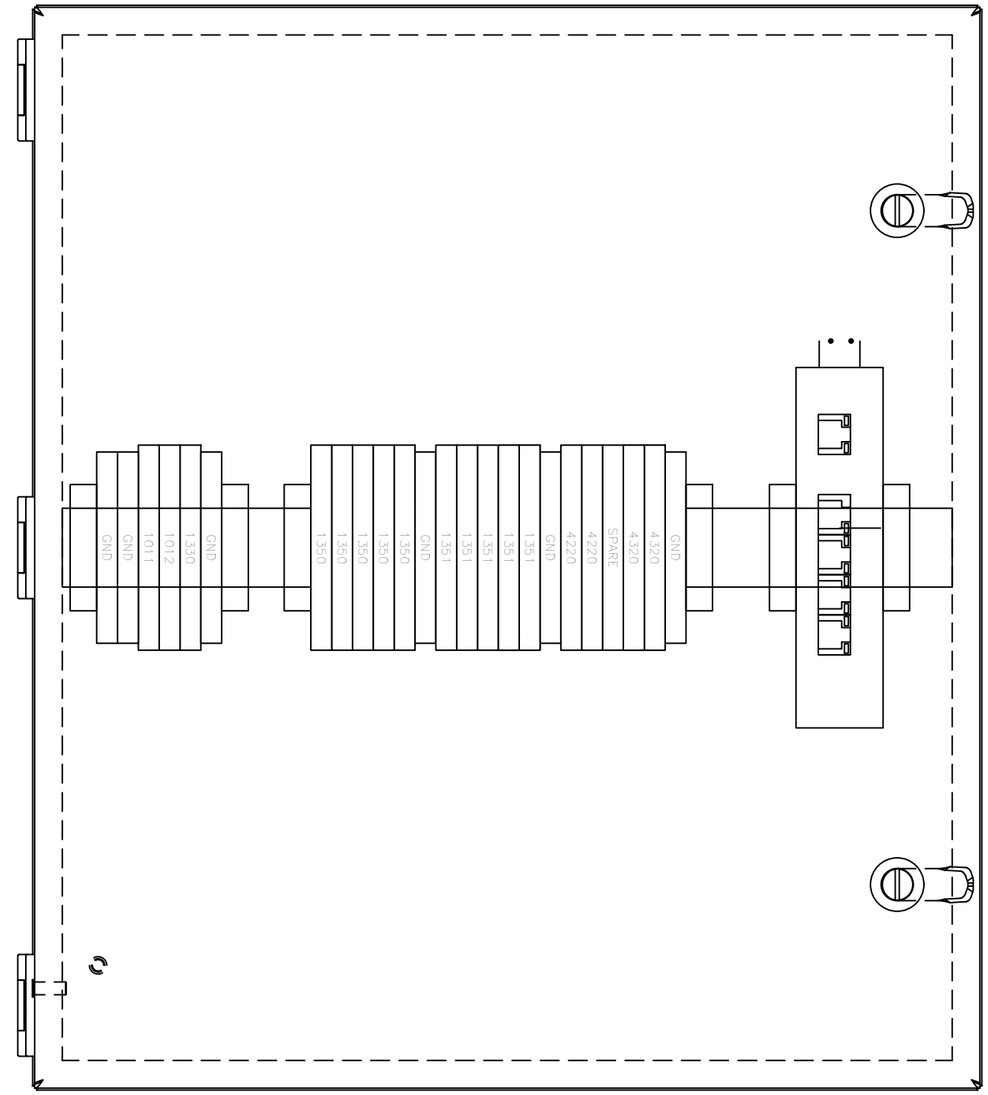

TOOL PACK
J-BOX
SCE-1614ELJ

APPROVALS	SUPPLY VOLTAGE	NEMA TYPE
N/A	480V 3PH 60HZ	12

AREA CLASSIFICATION
GENERAL INDUSTRIAL

REV	DESCRIPTION	DATE	BY

MAIN PNL TERMINALS
N/A
OPR STA TERMINALS
J-BOX TERMINALS
FUSED TERMINALS

TERMINAL BLOCK LEGEND

THIS DOCUMENT CONTAINS PROPRIETARY INFORMATION WHICH IS THE PROPERTY OF FEYEN ZYLSTRA, INC. THIS INFORMATION HAS BEEN DETERMINED TO BE CONFIDENTIAL BY FEYEN ZYLSTRA, INC., AND SHALL NOT BE USED, DISCLOSED OR REPRODUCED, IN WHOLE OR IN PART FOR THE MANUFACTURE OR SALE OF ANY PART OR PRODUCT BY YOU OR ANY OTHER PARTY TO WHOM THE INFORMATION MAY BE SUPPLIED WITHOUT THE PRIOR WRITTEN CONSENT OF FEYEN ZYLSTRA, INC.

FEYEN ZYLSTRA
2396 HILLSIDE DR NW
GRAND RAPIDS, MI
49544

ENGINEER	SCALE
PH	N/A
DRAWN BY	CHECKED BY
NJN	

J-BOX LAYOUT

CG AUTOMATION & FIXTURE, INC
TOOLING FIXTURES
TOOL PACK 1889

CSO #	DRAWING #	REV
4/18/2016	1889-E10	

DATE 6/16/2016 SHEET 10 OF 11

F1	F2	F3	F4
QTY	CATALOG	MFG	DESCRIPTION
1	CGT025030B13CX	ASCO/NEUMATICS	CYLINDER
5	CGT032075B13AX	ASCO/NEUMATICS	CYLINDER
2	S2AK-02A1C-BAA2	ASCO/NEUMATICS	CYLINDER
2	F1AK-01E1C-BAA2	ASCO/NEUMATICS	CYLINDER
1	P3AL-05A11-DAA2	ASCO/NEUMATICS	CYLINDER
3	240-205	ASCO/NEUMATICS	DIGITAL I/O BLOCK
2	240-212	ASCO/NEUMATICS	ANALOG I/O BLOCK
1	240-207	ASCO/NEUMATICS	DIGITAL I/O BLOCK
1	911-200-110	TELSONIC	GENERATOR/CONTROLLER/MAG
5	200-100-020	TELSONIC	CONVERTER CABLE-CONVERTER TO RELAY
5	921-245-010	TELSONIC	FULL WAVE CONVERTER/SE3510
5	300-270-260	TELSONIC	GUIDED ACTUATOR ASSEMBLY WITH COOLING AIR TUBE
1	SCE	SCE-1614ELJ	JUNCTION BOX
1	SCE	SCE-16P14J	SUBPANEL
5	1492-JG4	AB	SCREW CONNECTION TERMINAL BLOCK; 1492-J
15	1492-J4	AB	SCREW CONNECTION TERMINAL BLOCK; 1492-J
5	1492-J4-BL	AB	SCREW CONNECTION TERMINAL BLOCK; 1492-J
1	CX-01JM	MENCOM	MALE RJ45
3	CX-05SM	MENCOM	MALE 16A 5 PIN
1	CX-FM	MENCOM	DUMMY FILLER
1	CHI-2CP	MENCOM	PANEL SHELL
1	CX-06TM	MENCOM	MODULAR 6 SPOT FRAME
1	CX-8JF	MENCOM	MIXIO TO RJ45
5	888011573		TELSONIC RETURN PROX
5	8022214		TELSONIC ANALOG EXTEND PROX
10	9E10-000-331	CANFIELD	CYLINDER PROX
12	9G10-000-331	CANFIELD	CYLINDER PROX
8	FU-53TZ	KEYENCE	TRANSMISSIVE FIBER UNIT
8	FS-N10	KEYENCE	FIBER AMPLIFIER ZERO LINE EXPANSION UNIT
9	EH-303A	KEYENCE	LONG RANGE SHIELDED COMPACT SEPARATE-AMPLIFIER SENSORS ES01 SERIES

APPROVALS	SUPPLY VOLTAGE	NEMA TYPE
N/A	480V 3PH 60HZ	12

AREA CLASSIFICATION
GENERAL INDUSTRIAL

REV	DESCRIPTION	DATE	BY

MAIN PNL TERMINALS
N/A
OPR STA TERMINALS
J-BOX TERMINALS
FUSED TERMINALS
TERMINAL BLOCK LEGEND

THIS DOCUMENT CONTAINS PROPRIETARY INFORMATION WHICH IS THE PROPERTY OF FEYEN ZYLSTRA, INC. THIS INFORMATION HAS BEEN DETERMINED TO BE CONFIDENTIAL BY FEYEN ZYLSTRA, INC., AND SHALL NOT BE USED, DISCLOSED OR REPRODUCED, IN WHOLE OR IN PART FOR THE MANUFACTURE OR SALE OF ANY PART OR PRODUCT BY YOU OR ANY OTHER PARTY TO WHOM THE INFORMATION MAY BE SUPPLIED WITHOUT THE PRIOR WRITTEN CONSENT OF FEYEN ZYLSTRA, INC.

FEYEN ZYLSTRA
2396 HILLSIDE DR NW
GRAND RAPIDS, MI
49544

BILL OF MATERIAL

CG AUTOMATION & FIXTURE, INC
TOOLING FIXTURES
TOOL PACK 1889

ENGINEER	SCALE	CSO #	DRAWING #	REV
PH	N/A	4/18/2016	1889-E11	
DRAWN BY	CHECKED BY	DATE 6/16/2016	SHEET 11 OF 11	
NJN				

INSTALLATION GUIDELINES
(UNLESS NOTED OTHERWISE BY CUSTOMER SPECIFICATIONS)

- CONTROL PANELS SHALL HAVE LABELS TO WARN QUALIFIED PERSONS OF POTENTIAL ELECTRIC ARC FLASH HAZARDS. THE MARKING SHALL BE LOCATED SO AS TO BE CLEARLY VISIBLE TO QUALIFIED PERSONS BEFORE EXAMINING, ADJUSTING, SERVICING OR MAINTAINING EQUIPMENT.
- NO CONTROL COMPONENTS SHALL BE MOUNTED ON THE SIDES, BOTTOM, OR TOP OF THE CABINET.
- IF 480 VOLT AND CONTROL VOLTAGE (120 VOLT AC OR 24 VOLT DC) ARE IN THE SAME CABINET, THE 480 VOLT AC AND CONTROL VOLTAGE SECTIONS SHALL BE SEPARATED AND GUARDED (USE PLEXIGLAS COVER WHERE COMPONENTS ARE NOT ALREADY FINGER-SAFE).

~~~~~~

- BLACK - UNGROUNDED AC AND DC POWER CONDUCTORS.
- RED - UNGROUNDED AC CONTROL CONDUCTORS.
- WHITE - GROUNDED AC CONDUCTORS (CONTROL OR POWER).
- GREEN - EQUIPMENT GROUNDING CONDUCTORS.
- BLUE - UNGROUNDED DC CONTROL CONDUCTORS.
- WHITE W/BLUE STRIPE - GROUNDED DC CURRENT-CARRYING CONDUCTORS.
- ORANGE - UNGROUNDED CONDUCTORS THAT REMAIN ENERGIZED WHEN THE MAIN SUPPLY DISCONNECTING MEANS IS IN THE OFF POSITION.

~~~~~~

- FOR CONTROL WIRING USING INDIVIDUAL WIRES, USE MINIMUM #16 AWG.
- FOR POWER DISTRIBUTION AND MOTOR LEADS, USE MINIMUM #12 AWG.
- ALL RIGID CONDUIT CONNECTIONS TO ENCLOSURES THAT DO NOT HAVE A THREADED FITTING SHALL BE MADE USING MYERS TYPE STG GROUNDING HUBS OR APPROVED EQUAL. IN POTENTIALLY WET OR CORROSIVE LOCATIONS, LIQUID TIGHT FLEXIBLE CONDUIT (SEALTITE) CONNECTIONS TO ENCLOSURES SHALL INCLUDE AN ARMORED SEALING GASKET (CROUSE-HINDS TYPE SG2 OR EQUIVALENT) BETWEEN FITTING AND ENCLOSURE SURFACE.
- CORDS SHALL HAVE COMPRESSION-TYPE RUBBER CORD GRIPS FOR CONNECTING TO ENCLOSURES OR CONDULETS (LB CONDUIT BODIES).
- CORDS SHALL BE SECURELY FASTENED TO MACHINE STRUCTURE AND PROTECTED BY BUSHINGS AND ATTACHMENT FITTINGS, AS WELL AS ADEQUATE STRAIN RELIEF WHERE EXITING FROM PANELS AND WIREWAYS.
- ALL WIRING SHALL TERMINATE ON EITHER A TERMINAL BLOCK OR MOUNTED DEVICE.
- ALL WIRES SHALL BE CONTINUOUS BETWEEN INSTRUMENT, CONTROL DEVICES, AND TERMINAL BLOCKS. ALL CONTINUATIONS SHALL BE MADE USING TERMINAL BLOCKS.
- THE NUMBER OF WIRES CONNECTED TO A TERMINAL SHALL BE LIMITED TO TWO (2) WIRES.
- WIRING CONNECTIONS SHALL BE DETACHABLE (WIRE NUTS, SCREW TERMINALS, OR PULL-APART TERMINALS); NOT CRIMPED BUTT SPLICES.
- CONTROL AND INSTRUMENT WIRING SHALL BE TERMINATED USING RING-TONGUE OR LOCKING-FORK CONNECTORS WHEN PRESSURE TERMINALS ARE NOT AVAILABLE.
- TERMINAL BLOCKS SHALL BE MOUNTED AND WIRED SO THAT INTERNAL AND EXTERNAL WIRING DO NOT CROSS OVER THE TERMINALS. IN GENERAL, ALL TERMINAL STRIPS SHALL HAVE A DESIGNATED "PANEL" SIDE AND A "FIELD" SIDE.
- ALL ELECTRICAL ENCLOSURES SHALL HAVE A GROUNDING CONDUCTOR ATTACHED TO THE DOOR STUD AND WIRED TO THE GROUND TERMINAL IN THE ENCLOSURE.
- ALL ELECTRICAL ENCLOSURES SHALL HAVE THE PAINT OF THE BACK PANEL REMOVED (TO BARE METAL) AT THE GROUND LUG CONNECTION POINT.
- SOME DISASSEMBLY OF MACHINE WIRING MAY BE REQUIRED FOR SHIPPING. THESE TERMINATIONS WILL BE THE RESPONSIBILITY OF THE CUSTOMER.

FILENAME	SH	DWGDESC
1889-E00	0	TABLE OF CONTENTS
1889-E01	1	POWER DISTRIBUTION
1889-E02	2	POWER DISTRIBUTION
1889-E03	3	POWER DISTRIBUTION
1889-E04	4	POWER DISTRIBUTION
1889-E05	5	I/O SCHEMATIC
1889-E06	6	I/O SCHEMATIC
1889-E07	7	I/O SCHEMATIC
1889-E08	8	I/O SCHEMATIC
1889-E09	9	I/O SCHEMATIC
1889-E10	10	J-BOX LAYOUT
1889-E11	11	BILL OF MATERIAL

CG AUTOMATION & FIXTURE, INC
TOOLING CENTERS
GRUPO HOWELL, MI
TOOL PACK 1889

APPROVALS	SUPPLY VOLTAGE	NEMA TYPE
N/A	480V 3PH 60HZ	12

AREA CLASSIFICATION
GENERAL INDUSTRIAL

REV	DESCRIPTION	DATE	BY

TERMINAL BLOCK LEGEND
- □ MAIN PNL TERMINALS
- △ N/A
- ○ OPR STA TERMINALS
- ◇ J-BOX TERMINALS
- ⬡ FUSED TERMINALS

THIS DOCUMENT CONTAINS PROPRIETARY INFORMATION WHICH IS THE PROPERTY OF FEYEN ZYLSTRA, INC. THIS INFORMATION HAS BEEN DETERMINED TO BE CONFIDENTIAL BY FEYEN ZYLSTRA, INC., AND SHALL NOT BE USED, DISCLOSED OR REPRODUCED, IN WHOLE OR IN PART FOR THE MANUFACTURE OR SALE OF ANY PART OR PRODUCT BY YOU OR ANY OTHER PARTY TO WHOM THE INFORMATION MAY BE SUPPLIED WITHOUT THE PRIOR WRITTEN CONSENT OF FEYEN ZYLSTRA, INC.

fz
FEYEN ZYLSTRA
2396 HILLSIDE DR NW
GRAND RAPIDS, MI
49544

ENGINEER	SCALE
PH	N/A
DRAWN BY	CHECKED BY
NJN	

TABLE OF CONTENTS

CG AUTOMATION & FIXTURE, INC
TOOLING FIXTURES
TOOL PACK 1889

CSO #	DRAWING #	REV
4/18/2016	1889-E00	

DATE 6/16/2016 SHEET 0 OF 11